Series Ars Satin Copper

4-hole bath mixer with accesories

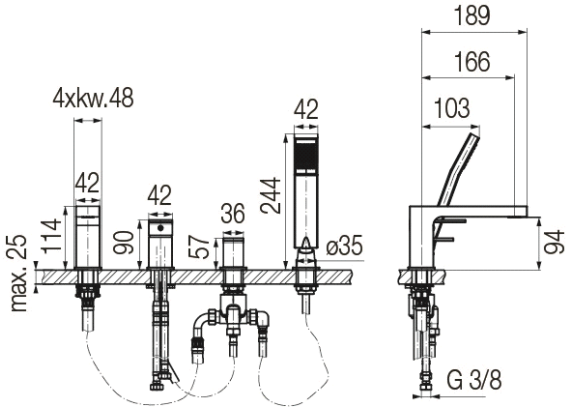

Code	Cartridge	Flow class	Hoses	EAN13
2420580	cartridge Φ35 low	B/A	G3/8	5902273562818

Product usage:
For use in with cold and hot water systems in buildings

Type:
Bath mixers

Guarantee:
25-year

Technical data/Operating parameters:
Recommended working pressure: 0,1-0,5 MPa,
Max temperature: 90°C

Used materials:
brass

Finish:
satin copper PVD